SZU NA NISKIM FREKV.

J-FET

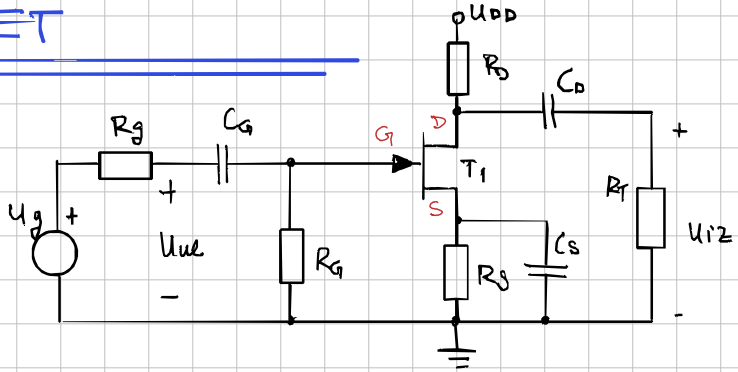

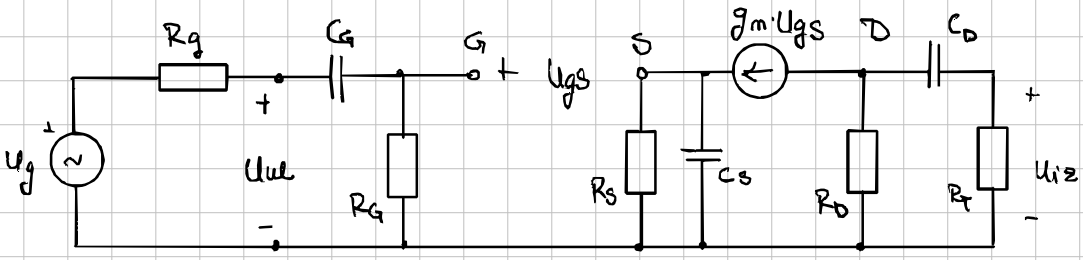

$$A_v(j\omega) = \frac{U_{iz}}{U_{ul}}$$

Cs utjecaj

C_G i C_d predstavljaju K.S.

$$\omega_1 = \frac{1}{T_1} = \frac{1}{C_S \cdot R_S} \quad !$$

uvijek

mora oblik biti kao kod BipT:

$$\boxed{A_v(j\omega) = A_{vn} \frac{1 + j\frac{\omega}{\omega_1}}{1 + j\frac{\omega}{\omega_2}}}$$

A_{vn} pojačanje na niskim frekv kada se još uvijek vidi RS jer Cs nije počeo djelovati

+ C_D i C_G po pretpostavci K.S.

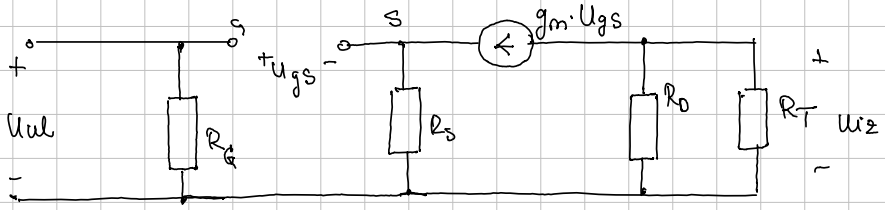

$$A_{vn} = \frac{U_{iz}}{U_{ul}} = \frac{-g_m \cdot U_{gs} \cdot (R_D \parallel R_T)}{U_{gs} + g_m \cdot U_{gs} \cdot R_S} = \frac{-g_m (R_D \parallel R_T)}{1 + g_m R_S} = A_{vn}$$

C_S utjecaj 2/2

$\omega_2 = ?$ → umjesto R_S ---> $Z_S = (R_S \parallel Z_{C_S})$, $Z_{C_S} = \frac{1}{j\omega C_S}$

$$A_V(j\omega) = \frac{-g_m \cdot (R_D \parallel R_T)}{1 + g_m \cdot Z_S}$$

↳ $Z_S = \frac{R_S}{R_S j\omega C_S + 1}$

$$A_V(j\omega) = -\frac{\frac{g_m (R_D \parallel R_T)}{1}}{\frac{1 + j\omega C_S \cdot R_S + g_m R_S}{1 + j\omega C_S \cdot R_S}} = -\frac{g_m \cdot (R_D \parallel R_T)(1 + j\omega C_S \cdot R_S)}{\underbrace{1 + j\omega C_S \cdot R_S + g_m \cdot R_S}_{R_{\text{cijeli dio}}}}$$

$$A_V(j\omega) = \underbrace{-\frac{g_m \cdot (R_D \parallel R_T)}{1 + g_m \cdot R_S}}_{A_{V0}} \cdot \frac{1 + j\omega C_S \cdot R_S}{\underbrace{1 + j\omega C_S R_S \cdot \frac{1}{1 + g_m R_S}}_{\text{pišemo kao } \frac{1 + j\frac{\omega}{\omega_1}}{1 + j\frac{\omega}{\omega_2}}}}$$

→ $\omega_1 = \frac{1}{C_S \cdot R_S} = \frac{1}{\tau_1}$!

→ $\omega_2 = \frac{1 + g_m R_S}{C_S \cdot R_S} = \frac{1}{\tau_2}$

$$\tau_2 = C_S \cdot \left[R_S \cdot \frac{1}{1 + g_m R_S} \right]$$

$$\rightarrow \tau_2 = C_S \cdot \left[\frac{1}{\frac{1}{R_S} + g_m} \right] \Rightarrow \omega_2 = \frac{1}{C_S \cdot \frac{1}{\frac{1}{R_S} + g_m}} = \frac{1}{C_S \left(\frac{1}{R_S} + g_m\right)^{-1}} = \frac{1}{C_S \left(R_S \parallel \frac{1}{g_m}\right)}$$

* kada analiziramo C_S, $C_G = K.S.$ → G je na masi

$U_{ul} = 0$

$C_G = K.S.$

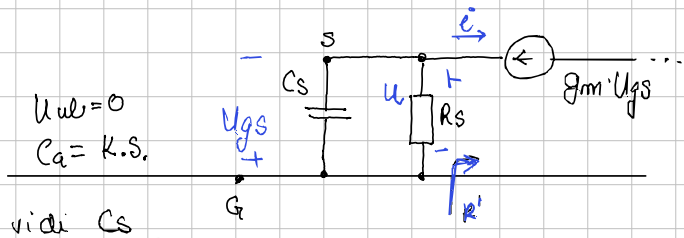

Što vidi C_S

Pokušaj 1.) $\tau_2 = C_S \cdot R_S$ (vidi samo R_S)

ali kada ti $\omega_2 = \frac{1}{\tau_2} = \frac{1}{C_S \cdot R_S} \Rightarrow A_V(j\omega) = 1$ KRIVO!

Pokušaj 2.) $\tau_2 = C_S \cdot [R_S \parallel R']$

$$R' = \frac{u}{i} = \frac{-u_{gs}}{-g_m \cdot u_{gs}} \Rightarrow R' = \frac{1}{g_m}$$

$$\tau_2 = C_S \cdot \left[R_S \parallel \frac{1}{g_m} \right]$$ to je to!

$\boxed{C_G \text{ utjecaj}}$ funkciji $A_v(j\omega)$ bismo dod pomnožili sa ... $\dfrac{j\frac{\omega}{\omega_3}}{1+j\frac{\omega}{\omega_3}}$ ...

→ zanima nas $\underline{\omega_3}$ => $\omega_3 = \dfrac{1}{\tau_3} = \dfrac{1}{C_G \cdot R_G}$

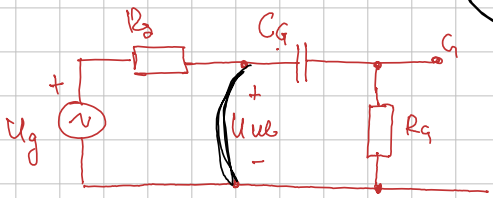

→ budući da je ... $A_v = \dfrac{U_{iz}}{U_{ul}}$ → $U_{ul} = K \cdot S.$ i C_G vidi $\underline{\text{samo } R_G}$

$\boxed{C_D \text{ utjecaj}}$ ... $\dfrac{j\frac{\omega}{\omega_4}}{1+j\frac{\omega}{\omega_4}}$ ... → $\omega_4 = ?$ => $\dfrac{1}{\tau_4} = \dfrac{1}{C_D \cdot (R_D + R_T)}$

Znači ...

$$\boxed{A_v = A_{vn} \underbrace{\frac{1+j\frac{\omega}{\omega_1}}{1+j\frac{\omega}{\omega_2}}}_{C_S} \cdot \underbrace{\frac{j\frac{\omega}{\omega_3}}{1+j\frac{\omega}{\omega_3}}}_{C_G} \cdot \underbrace{\frac{j\frac{\omega}{\omega_4}}{1+j\frac{\omega}{\omega_4}}}_{C_D}}$$

C_S : $\tau_1 = C_S \cdot R_S$ $\qquad$ C_G : $\tau_3 = C_G \cdot R_G$ $\qquad$ C_D : $\tau_4 = C_D (R_D + R_T)$

$\tau_2 = C_S \cdot \left(R_S \parallel \dfrac{1}{g_m}\right)$

A_{vn} : pojačanje na niskim frekv : $A_{vn} = -g_m \dfrac{(R_D \parallel R_T)}{1 + g_m \cdot R_S}$

A_{vo} : pojačanje na srednjim frekv : $A_{vo} = A_{vn} \cdot \dfrac{\omega_2}{\omega_1} = A_{vn} \cdot \dfrac{\tau_1}{\tau_2} = -g_m (R_D \parallel R_T)$

Donja graničnа frekvencija $\omega_d = \max\{\omega_G, \omega_S, \omega_D\}$

→ najveća je donja

→ prva sljedeća mora biti 4x na manjoj $\underline{\text{od } \omega_d}$

Primjer 5.3.1

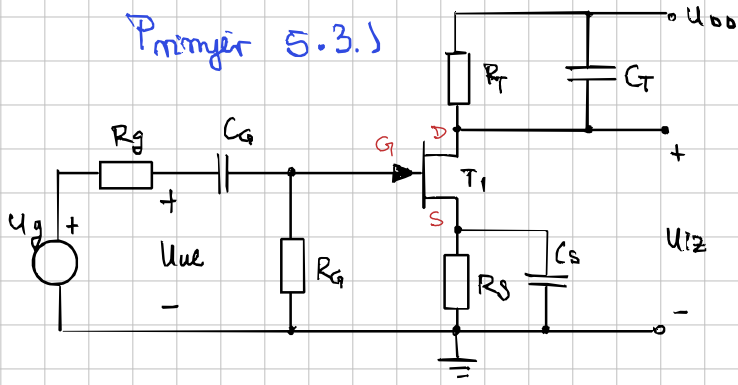

$R_S = ?$

$I_{DQ} = 1mA$

$A_v = \frac{U_{iz}}{U_{ul}}$ $(A_{v0}) = ?$

$\omega_d = ?$

$U_{DD} = 12V$ $C_G = 5nF$ $R_T = 3k\Omega$ $C_S = 20\mu F$

$R_g = 100\Omega$ $R_G = 1M\Omega$ $C_T = 10pF$

$I_{DSS} = 16mA$ $U_p = -2V$

Statika → nvm sad (idk zašto, mislim da mu se samo neda)

→ nadomjesni sklop:

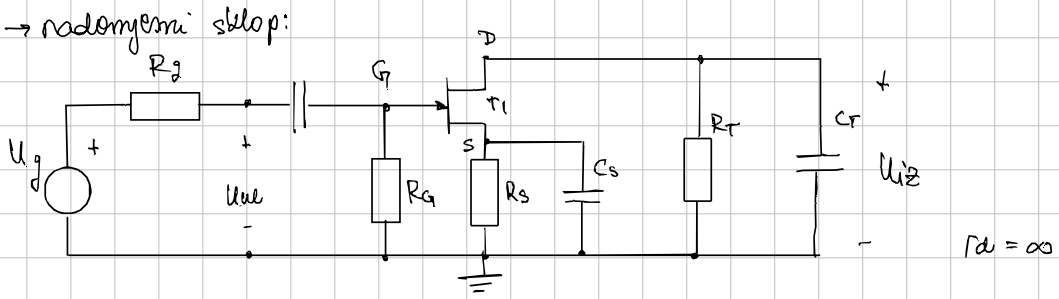

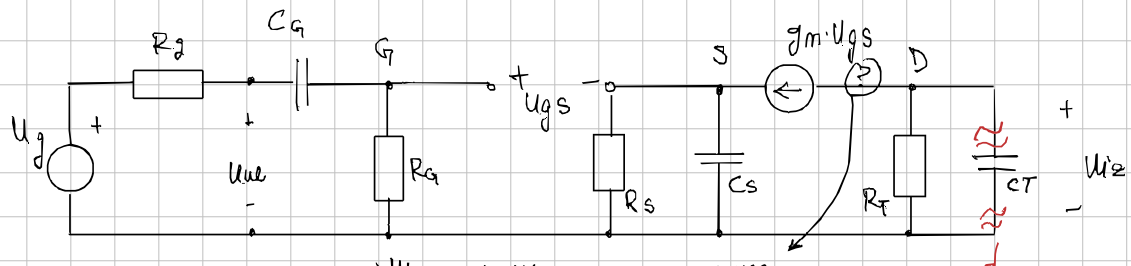

$$A_v(j\omega) = \frac{U_{iz}}{U_{ul}} = A_{vn} \cdot \frac{1 + j\frac{\omega}{\omega_1}}{1 + j\frac{\omega}{\omega_2}} \cdot \frac{j\frac{\omega}{\omega_3}}{1 + j\frac{\omega}{\omega_3}} \cdot \cancel{\frac{j\frac{\omega}{\omega_4}}{1 + j\frac{\omega}{\omega_4}}}$$

nema CD!

impedancija sve manja

→ kada bismo pustili da frekvenc. besk. raste ⇒ $U_{iz} = 0V$

→ trebamo: A_{vn}, ω_1, ω_2, ω_3

$\boxed{A_{vn}}$ → niske frekvencije ⇒ C_S je otvoren

• degeneracija pojačanja zbog djelovanja R_S

(ignoriramo jer utječe tek na vrlo visokim frekv.)

↳ svi ostali kond. su K.S.

$$A_{vn} = \frac{U_{iz}}{U_{ul}} = \frac{-g_m \cdot \cancel{U_{gs}} \cdot R_T}{\cancel{U_{gs}} + R_S \cdot g_m \cdot \cancel{U_{gs}}}$$

$$A_{vn} = \frac{-g_m \cdot R_T}{1 + R_S \cdot g_m} \qquad \omega_1 = \frac{1}{\tau_1} = \frac{1}{C_S \cdot R_S}$$

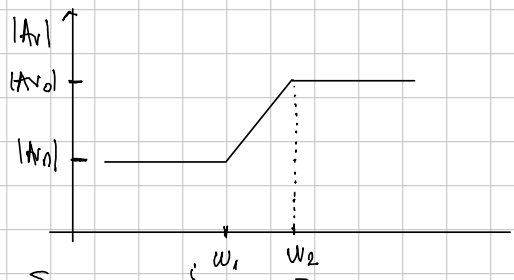

→ utjecaj C_S → U_{ul} = K.S

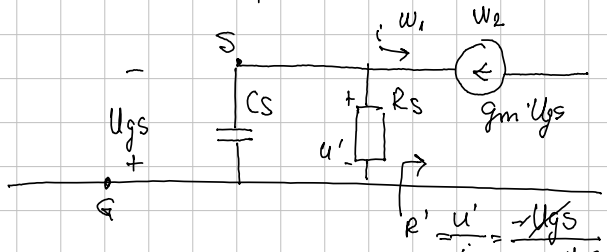

$$R' = \frac{u'}{i} = \frac{-\cancel{U_{gs}}}{+g_m \cdot \cancel{U_{gs}}} = \frac{1}{g_m}$$

$$\omega_2 = \frac{1}{\tau_2} = \frac{1}{C_S\left[R_S \| \frac{1}{g_m}\right]}$$

$$\omega_3 = \frac{1}{C_G \cdot R_G}$$

• U_{ul} = K.S

• G je u zraku

$\omega_d = \max\{\omega_1, \omega_2, \omega_3\}$

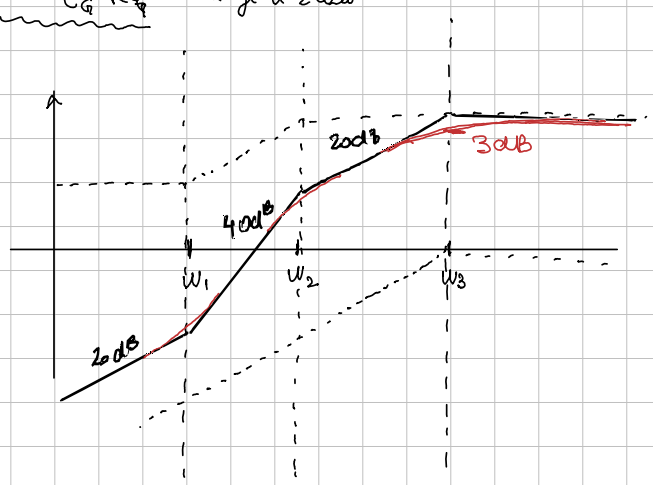

principijalno rješenje $z = d$

→ pretpostavili smo samo da je $\omega_3 = \omega_d$